PV SYSTEM DETAILS	
PV TYPE/MODEL:	Trina Solar, TSM-NEG21C.20 715 (715W)
No. MODULES:	1260
DC kWp (TOTAL):	900.90 kWp
AC kW (TOTAL):	700kW
INVERTER/MODEL:	7 X Tauro Eco 100-3-P (Fronius)
INSTALLATION TYPE:	FIXED TILT

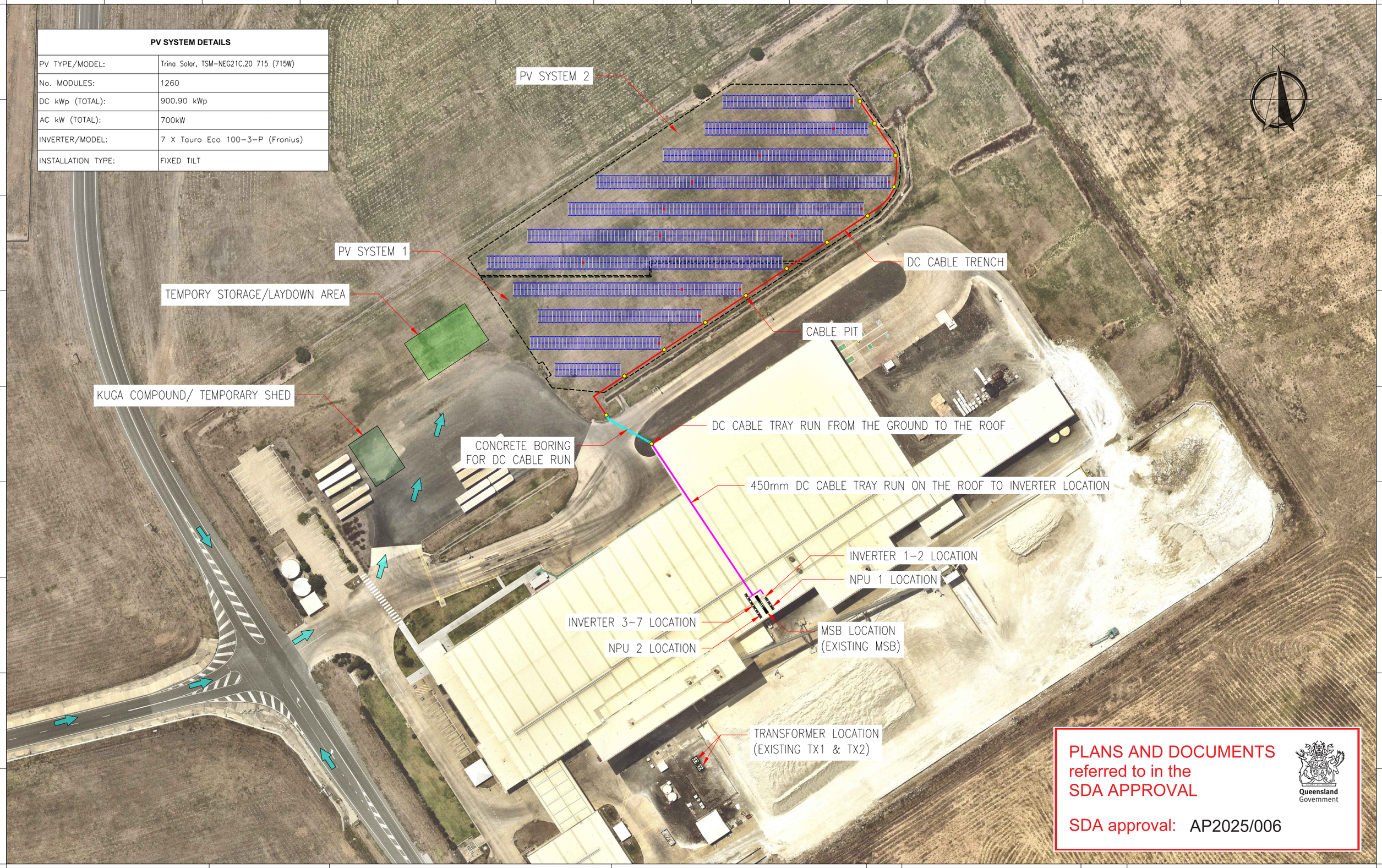

PLANS AND DOCUMENTS referred to in the SDA APPROVAL

Queensland Government

SDA approval: AP2025/006

KUGA ENERGY

KUGA ENERGY

T: 13 58 42
E: m.merluza@kuga.energy
W: www.13kuga.com.au

This drawing is the intellectual property of Kuga Energy. Copyright © Kuga Energy 2025. All rights reserved.

CLIENT NAME: ETEX AUSTRALIA PTY LTD

PROJECT NUMBER: J3087

SITE ADDRESS: 96 Buss st. Burnett Heads QLD 4670

SITE ACCESS PLAN

DWG NO: J3087 - 003

VER.	DESCRIPTION	DATE
1	ISSUED FOR CONSTRUCTION	04/09/2025

CONSTRUCTION PLAN

PV SYSTEM DETAILS	
PV TYPE/MODEL:	Trina Solar, TSM-NEG21C.20 715 (715W)
No. MODULES:	1260
DC kWp (TOTAL):	900.90 kWp
AC kW (TOTAL):	700kW
INVERTER/MODEL:	7 X Tauro Eco 100-3-P (Fronius)
INSTALLATION TYPE:	FIXED TILT

KUGA ENERGY

T: 13 58 42
E: m.merluza@kuga.energy
W: www.13kuga.com.au

This drawing is the intellectual property of Kuga Energy. Copyright © Kuga Energy 2025. All rights reserved.

CLIENT NAME: ETEX AUSTRALIA PTY LTD

PROJECT NUMBER: J3087

SITE ADDRESS: 96 Buss st. Burnett Heads QLD 4670

PV Layout

DWG NO: J3087 - 004

VER.	DESCRIPTION	DATE
1	ISSUED FOR CONSTRUCTION	04/09/2025

CONSTRUCTION PLAN

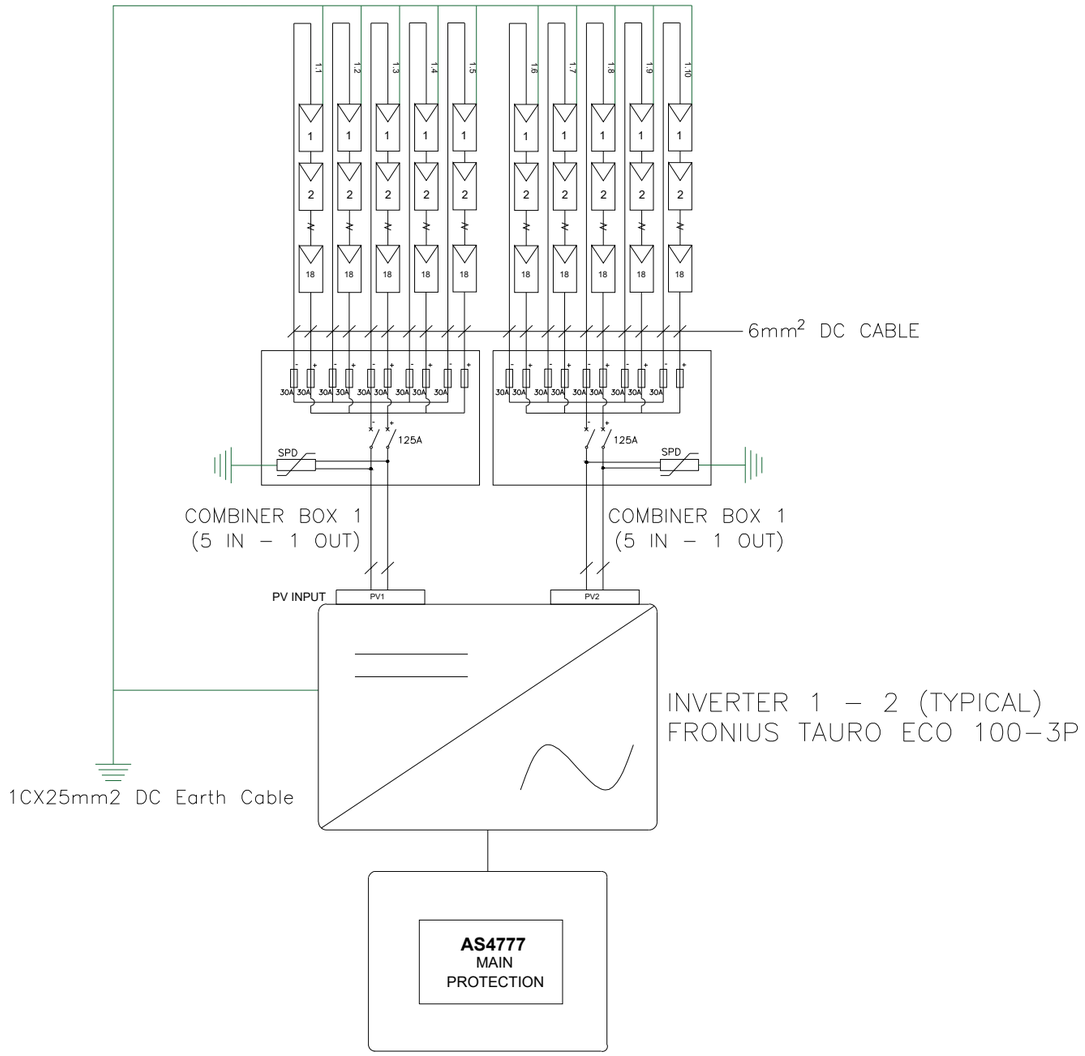

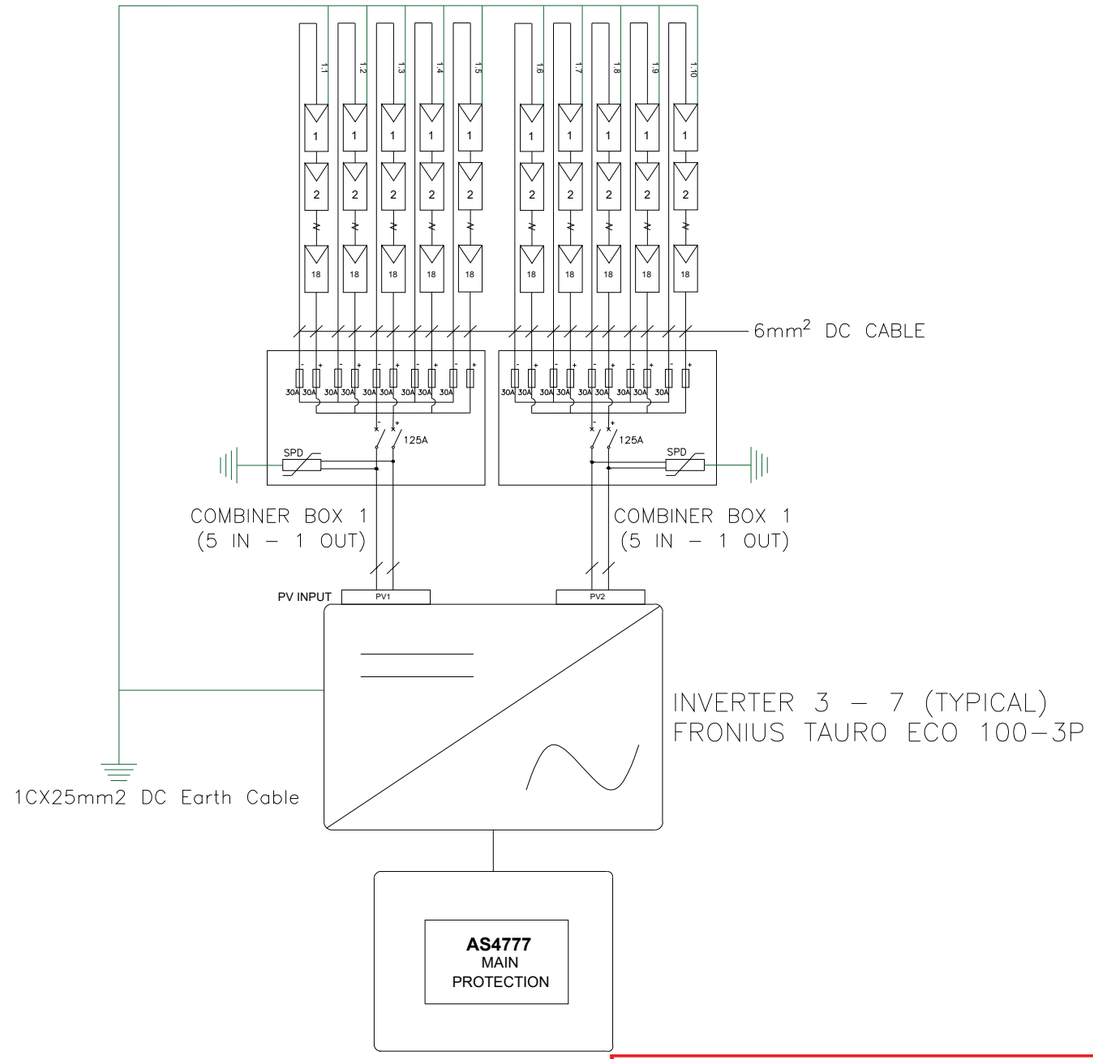

PLANS AND DOCUMENTS referred to in the SDA APPROVAL

Queensland Government

SDA approval: AP2025/006

KUGA ENERGY

T: 13 58 42
E: m.merluza@kuga.energy
W: www.13kuga.com.au

This drawing is the intellectual property of Kuga Energy. Copyright © Kuga Energy 2025. All rights reserved.

CLIENT NAME: ETEX AUSTRALIA PTY LTD

PROJECT NUMBER: J3087

SITE ADDRESS: 96 Buss st. Burnett Heads QLD 4670

DC WIRING SCHEMATIC

DWG NO: J3087 - 007

VER.	DESCRIPTION	DATE
1	ISSUED FOR CONSTRUCTION	04/09/2025

CONSTRUCTION PLAN

INVERTER PROTECTION SETTINGS SCHEDULE

PROTECTION FUNCTION	PROTECTIVE FUNCTION LIMIT	TRIP TIME DELAY	MAX DISCONNECTION TIME
Over Voltage 2 (V>>)	*275V*	*-*	*0.20S*
Over Voltage 1 (V>)	*265V*	*1 sec*	*2S*
Under Voltage 2 (V<<)	*70V*	*1 sec*	*2S*
Under Voltage 1 (V<)	*180V*	*10 sec*	*11S*
Over Frequency (Hz)	*52*	*-*	*0.20S*
Under Frequency (Hz)	*47*	*1 sec*	*2S*
ROCOF (81R)	*+/- 4Hz/s*	*-*	*0.25S*
Vector Shift (78)	*8 Deg*	*-*	*Instantaneous*

VOLT-VAR and VOLT-WATT SETTINGS

REFERENCE	VOLTAGE	P OUTPUT/ P RATED (%)
Vw1	*253V*	*100*
Vw2	*260V*	*20*
VOLT VAR SETTINGS		
Vv1	*207V*	*44% Supplying*
Vv2	*220V*	*0*
Vv3	*240V*	*0*
Vv4	*258V*	*60% Absorbing*

AC VOLTAGE RISE (PV SYSTEM 1)

FROM	TO	CURRENT	LENGTH (m)	CABLE SIZE	EARTH CABLE	VOLTAGE RISE(V)	VOLTAGE RISE %
INVERTER 1	NPU 1	144.9	3	4 X 1CX95mm^2 +E,Cu XLPE-110deg	1CX25mm^2,Cu	0.19	0.05%
INVERTER 2	NPU 1	144.9	6	4 X 1CX95mm^2 +E,Cu XLPE-110deg	1CX25mm^2,Cu	0.37	0.09%
NPU 1	MSB1	289.8	15	4 X 1CX150mm^2 +E,Cu XLPE-110deg	1CX50mm^2,Cu	1.37	0.34%
MSB 1	TRANSFORMER 1	289.8	30	16 X 1CX240mm^2 +E,Cu XLPE-110deg	1CX240mm^2,Cu	0.46	0.11%
	TOTAL VOLTAGE RISE (VOLTS)	2.20					
	TOTAL VOLTAGE RISE %	0.54%					

AC VOLTAGE RISE (PV SYSTEM 2)

FROM	TO	CURRENT	LENGTH (m)	CABLE SIZE	EARTH CABLE	VOLTAGE RISE(V)	VOLTAGE RISE %
INVERTER 3	NPU 2	144.9	3	4 X 1CX95mm^2 +E,Cu XLPE-110deg	1CX25mm^2,Cu	0.19	0.05%
INVERTER 4	NPU 2	144.9	6	4 X 1CX95mm^2 +E,Cu XLPE-110deg	1CX25mm^2,Cu	0.37	0.09%
INVERTER 5	NPU 2	144.9	9	4 X 1CX95mm^2 +E,Cu XLPE-110deg	1CX25mm^2,Cu	0.56	0.14%
INVERTER 6	NPU 2	144.9	12	4 X 1CX95mm^2 +E,Cu XLPE-110deg	1CX25mm^2,Cu	0.74	0.19%
INVERTER 7	NPU 2	144.9	15	4 X 1CX95mm^2 +E,Cu XLPE-110deg	1CX25mm^2,Cu	0.93	0.23%
NPU 2	MSB2	724.5	15	4 X 1CX300mm^2 +E,Cu XLPE-110deg	1CX120mm^2,Cu	1.96	0.49%
MSB 2	TRANSFORMER 2	724.5	30	16 X 1CX240mm^2 +E,Cu XLPE-110deg	1CX240mm^2,Cu	1.15	0.29%
	TOTAL VOLTAGE RISE (VOLTS)	4.04					
	TOTAL VOLTAGE RISE %	1.01%					

INVERTER SPECIFICATION

MODEL	Fronius Tauro ECO 100-3-P
MAX. AC POWER RATING	100 KVA
MAX. DC INPUT VOLTAGE	1000 V
MAX. DC INPUT CURRENT	200 A
RATED AC VOLTAGE	400 V
MAX. AC OUTPUT CURRENT	144.9 A
INVERTER WEIGHT	103 kg

PLANS AND DOCUMENTS referred to in the SDA APPROVAL

Queensland Government

SDA approval: AP2025/006

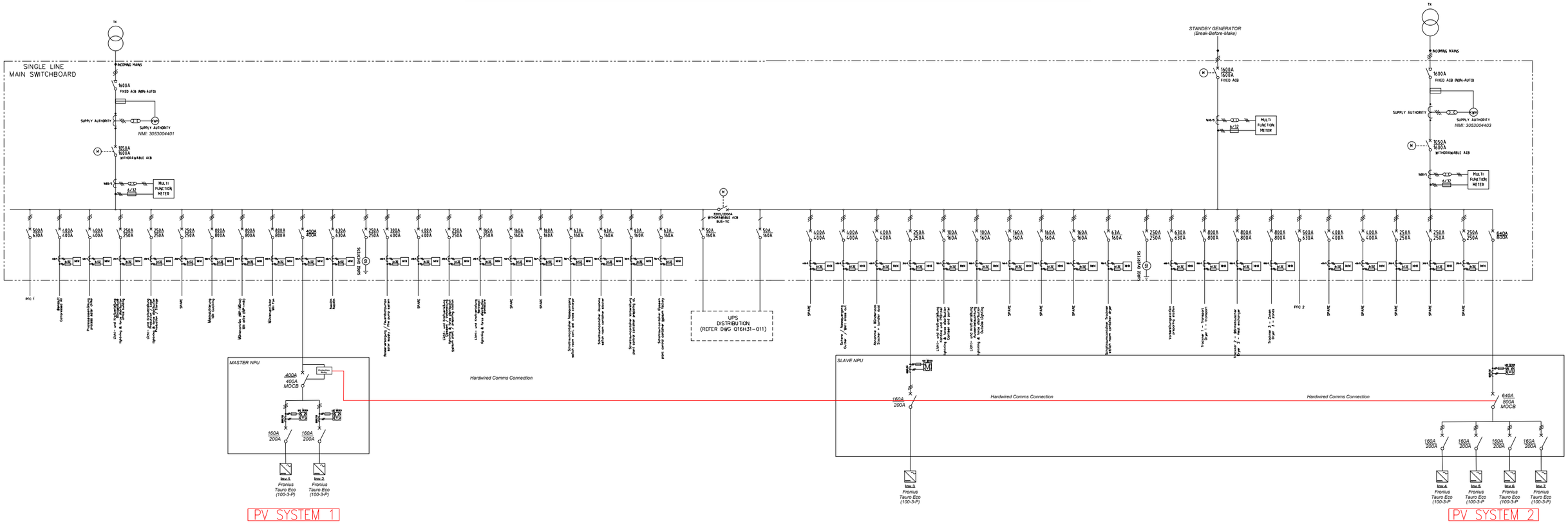

KUGA ENERGY

T: 13 58 42
E: m.merluza@kuga.energy
W: www.13kuga.com.au

This drawing is the intellectual property of Kuga Energy. Copyright © Kuga Energy 2025. All rights reserved.

CLIENT NAME: ETEX AUSTRALIA PTY LTD

PROJECT NUMBER: J3087

SITE ADDRESS: 96 Buss st. Burnett Heads QLD 4670

AC SLD

DWG NO: J3087 - 008

VER.	DESCRIPTION	DATE
1	ISSUED FOR CONSTRUCTION	04/09/2025

CONSTRUCTION PLAN

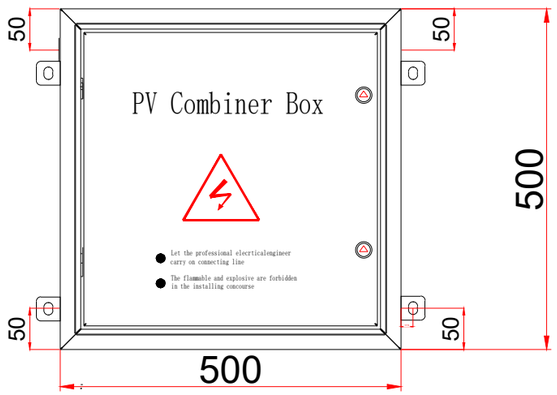

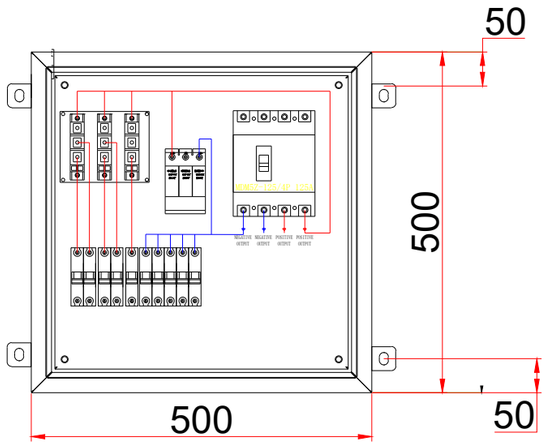

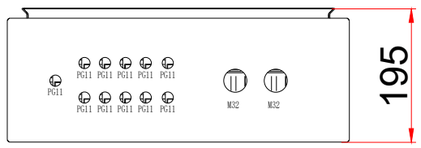

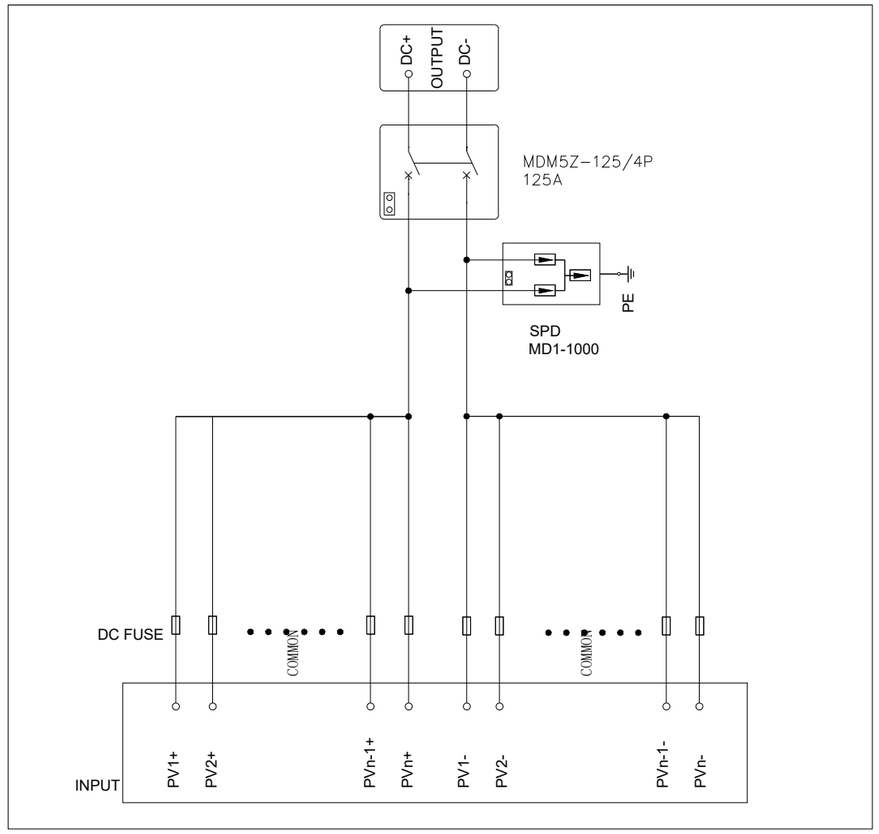

PLANS AND DOCUMENTS referred to in the SDA APPROVAL

Queensland Government

SDA approval: AP2025/006

KUGA ENERGY

KUGA ENERGY

T: 13 58 42
E: m.merluza@kuga.energy
W: www.13kuga.com.au

This drawing is the intellectual property of Kuga Energy. Copyright © Kuga Energy 2025. All rights reserved.

CLIENT NAME: ETEX AUSTRALIA PTY LTD

PROJECT NUMBER: J3087

SITE ADDRESS: 96 Buss st. Burnett Heads QLD 4670

COMBINER BOX DETAILS

DWG NO: J3087 - 0010

VER.	DESCRIPTION	DATE
1	ISSUED FOR CONSTRUCTION	04/09/2025

CONSTRUCTION PLAN

PLANS AND DOCUMENTS referred to in the SDA APPROVAL

Queensland Government

SDA approval: AP2025/006

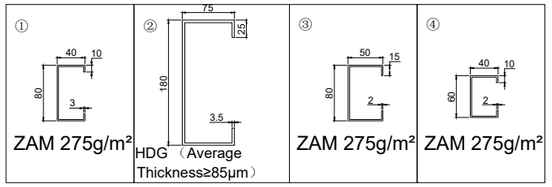

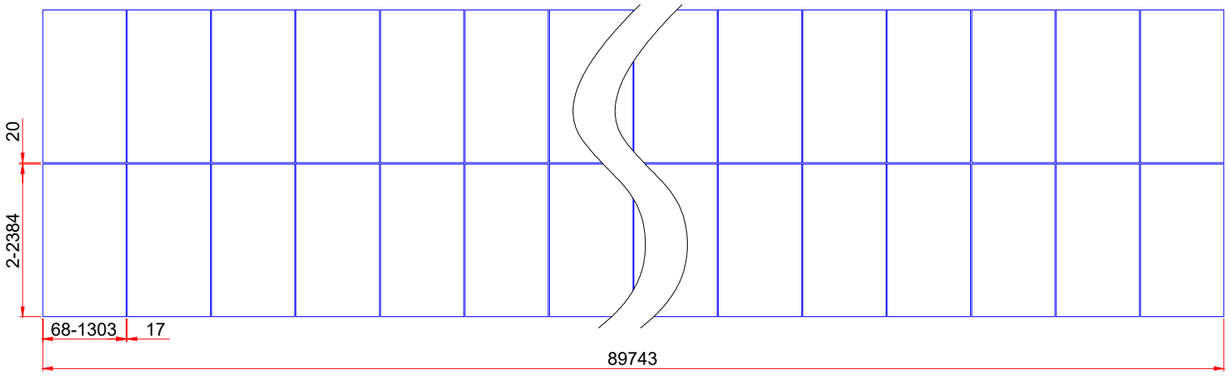

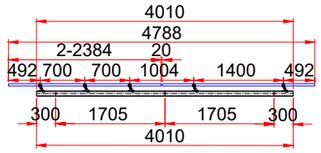

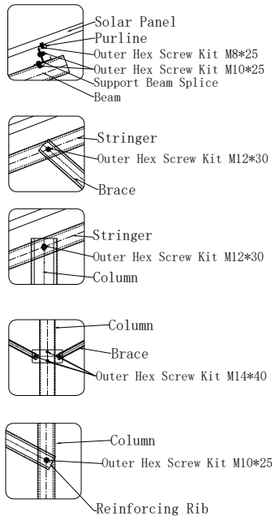

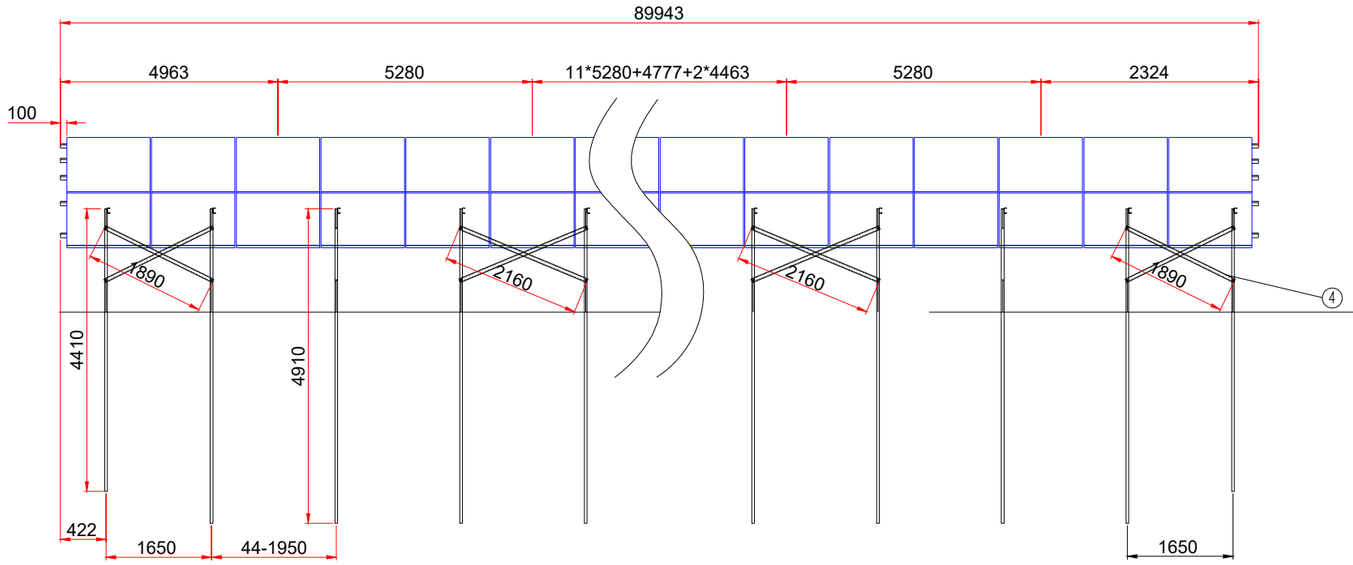

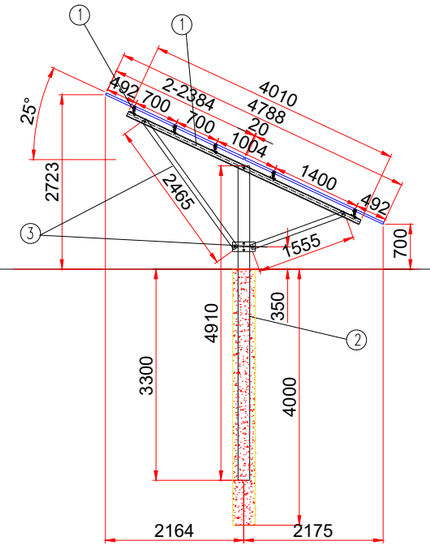

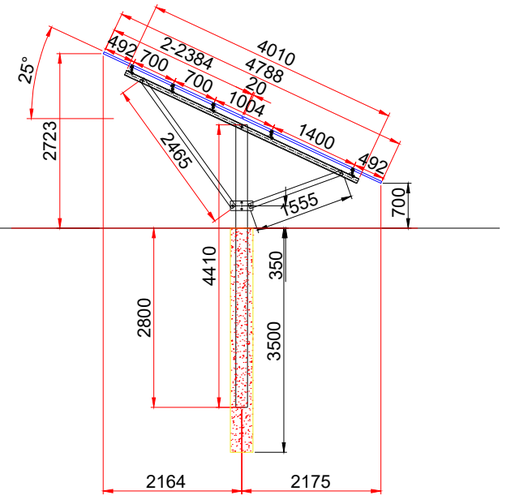

Technical information:

1.Module size is 2384x1303x33mm
2.Unit array is 2X68(136pcs)
3.Design wind speed is 69.3m/s
4.Design snow load is -kn/m²

KUGA ENERGY

KUGA ENERGY

T: 13 58 42
E: m.merluza@kuga.energy
W: www.13kuga.com.au

This drawing is the intellectual property of Kuga Energy. Copyright © Kuga Energy 2025. All rights reserved.

CLIENT NAME: ETEX AUSTRALIA PTY LTD

PROJECT NUMBER: J3087

SITE ADDRESS: 96 Buss st. Burnett Heads QLD 4670

FIXED TILT SYSTEM DRAWING

DWG NO: J3087 - 0011

VER.	DESCRIPTION	DATE
1	ISSUED FOR CONSTRUCTION	04/09/2025

CONSTRUCTION PLAN

TRENCH & BORING PLAN		
TRENCH	HD UPVC CONDUIT SIZE	CABLES
1	1 x 80mm	2 x 1C 95mm² DC Cable 1 x 2C 6mm² DC Twin Cable 1 x 1C 25mm² Earth Cable
2	1 x 80mm	4 x 1C 95mm² DC Cable 1 x 2C 6mm² DC Twin Cable 1 x 1C 25mm² Earth Cable
3	1 x 100mm	6 x 1C 95mm² DC Cable 1 x 2C 6mm² DC Cable 1 x 1C 25mm² Earth Cable
4	1 x 100mm	10 x 1C 95mm² DC Cable 1 x 1C 25mm² Earth Cable
5	2 x 100mm	14 x 1C 95mm² DC Cable 1 x 2C 6mm DC Twin Cable 1 x 1C 25mm² Earth Cable
6	2 x 100mm	18 x 1C 95mm² DC Cable 2 x 2C 6mm² DC Twin Cable 1 x 1C 25mm² Earth Cable
7	3 x 100mm	20 x 1C 95mm² DC Cable 2 x 2C 6mm² DC Twin Cable 1 x 1C 25mm² Earth Cable
8	3 x 100mm	4 x 1C 120mm² DC Cable 20 x 1C 95mm² DC Cable 1 x 2C 6mm² DC Twin Cable 1 x 1C 25mm² Earth Cable
9	3 x 100mm	4 x 1C 120mm² DC Cable 22 x 1C 95mm² DC Cable 1 x 2C 6mm² DC Twin Cable 1 x 1C 25mm² Earth Cable
10	3 x 100mm	4 x 1C 120mm² DC Cable 24 x 1C 95mm² DC Cable 2 x 2C 6mm² DC Twin Cable 1 x 1C 25mm² Earth Cable
11	3 x 100mm	4 x 1C 120mm² DC Cable 24 x 1C 95mm² DC Cable 1 x 1C 25mm² Earth Cable
BORING		
1	3 x 100mm	14x 95mm² DC Cable 14 x 95mm² DC Cable 1 x 25mm² Earth Cable

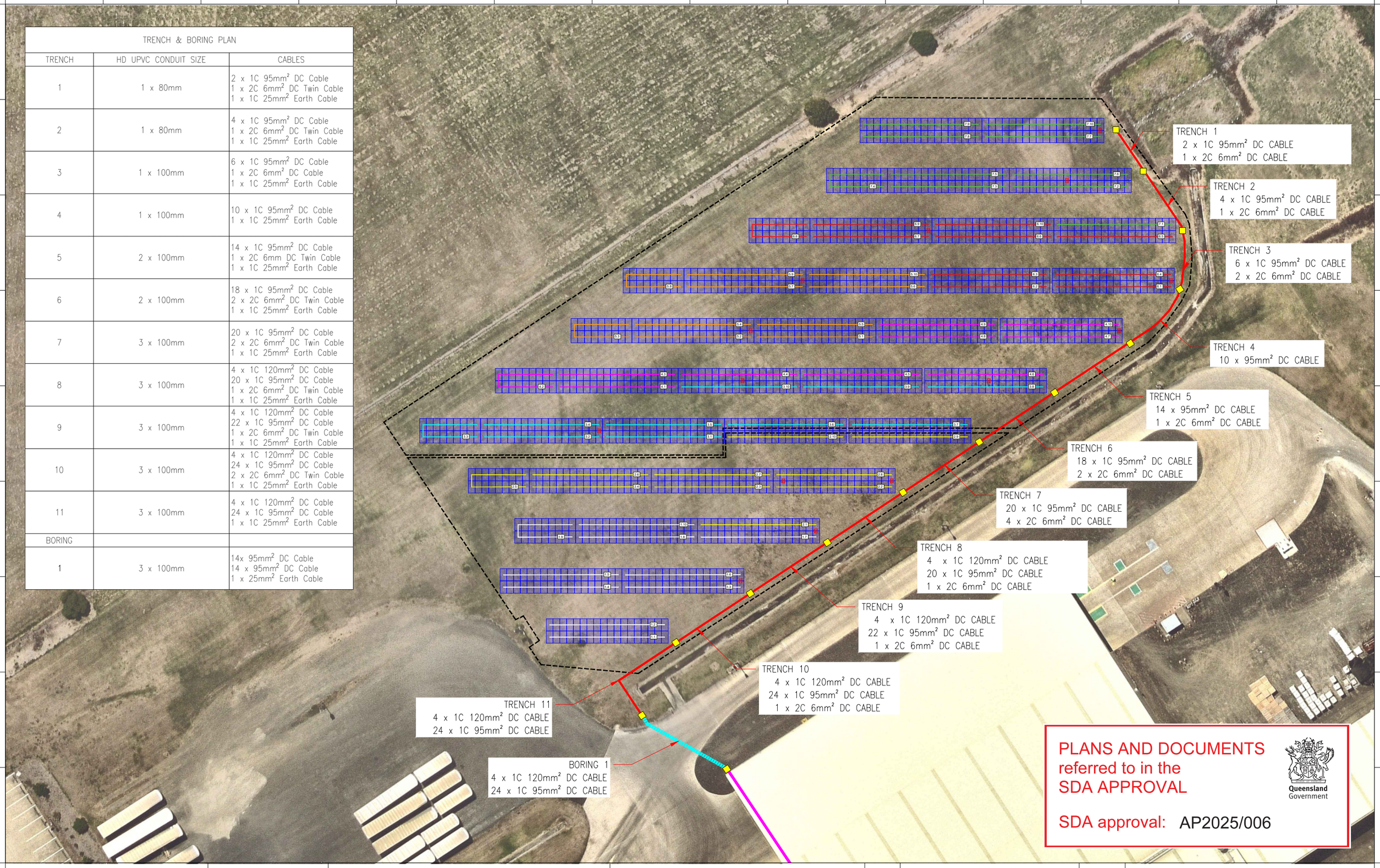

PLANS AND DOCUMENTS referred to in the SDA APPROVAL

Queensland Government

SDA approval: AP2025/006

KUGA ENERGY

KUGA ENERGY

T: 13 58 42
E: m.merluza@kuga.energy
W: www.13kuga.com.au

This drawing is the intellectual property of Kuga Energy. Copyright © Kuga Energy 2025. All rights reserved.

CLIENT NAME: ETEX AUSTRALIA PTY LTD

PROJECT NUMBER: J3087

SITE ADDRESS: 96 Buss st. Burnett Heads QLD 4670

TRENCHING LAYOUT

DWG NO: J3087 - 0016

VER.	DESCRIPTION	DATE
1	ISSUED FOR CONSTRUCTION	04/09/2025

CONSTRUCTION PLAN

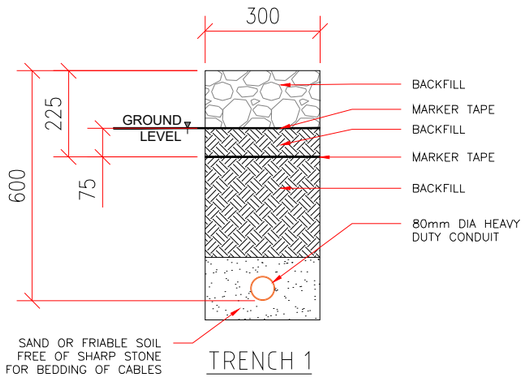

TRENCH 1

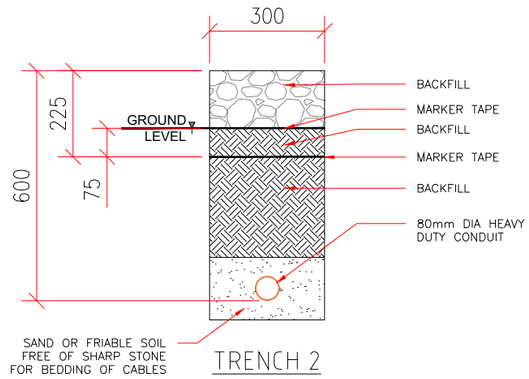

TRENCH 2

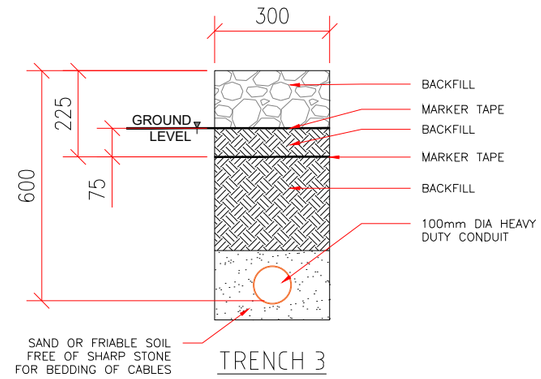

TRENCH 3

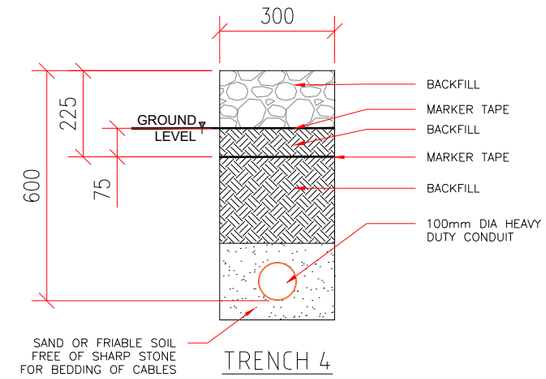

TRENCH 4

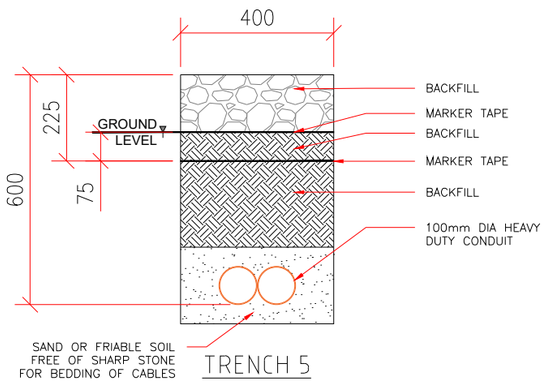

TRENCH 5

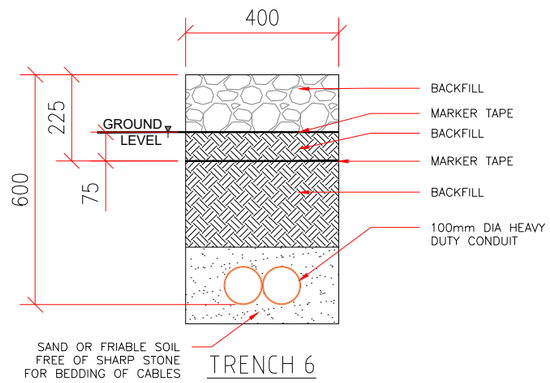

TRENCH 6

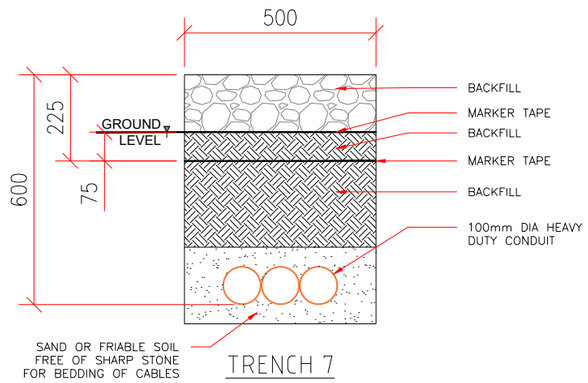

TRENCH 7

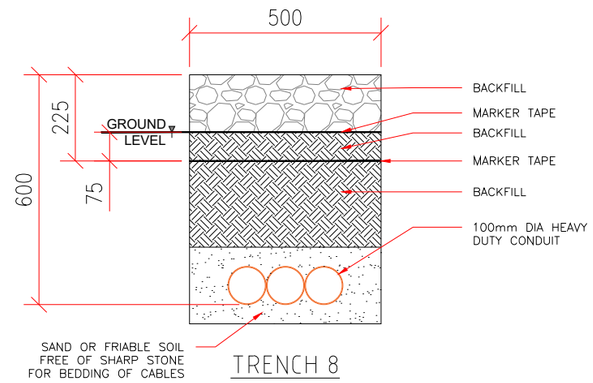

TRENCH 8

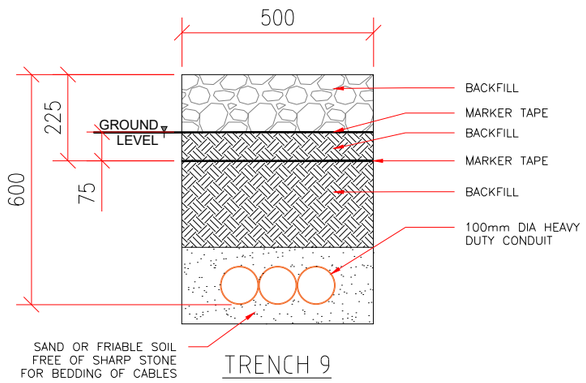

TRENCH 9

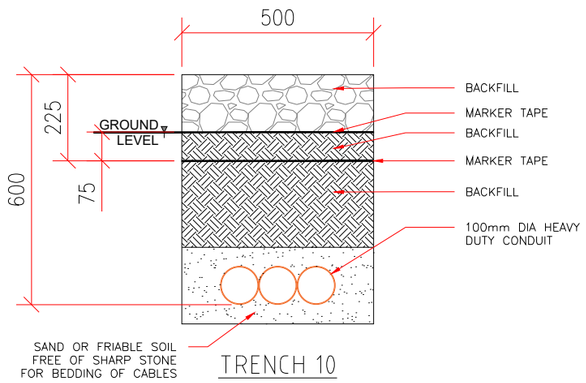

TRENCH 10

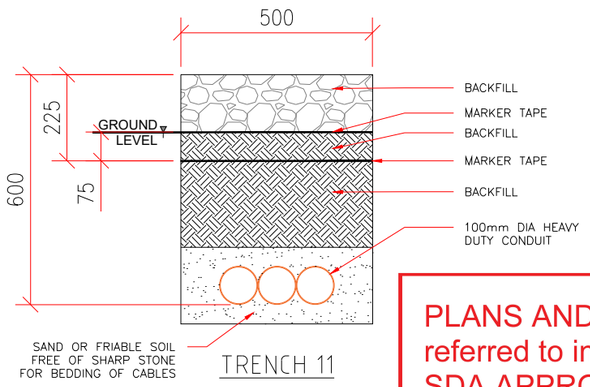

TRENCH 11

PLANS AND DOCUMENTS referred to in the SDA APPROVAL

Queensland Government

SDA approval: AP2025/006

KUGA ENERGY

KUGA ENERGY
T: 13 58 42
E: m.merluza@kuga.energy
W: www.13kuga.com.au

This drawing is the intellectual property of Kuga Energy. Copyright © Kuga Energy 2025. All rights reserved.

CLIENT NAME: ETEX AUSTRALIA PTY LTD

PROJECT NUMBER: J3087

SITE ADDRESS: 96 Buss st. Burnett Heads QLD 4670

TRENCHING DETAILS

DWG NO: J3087 - 0017

VER.	DESCRIPTION	DATE
1	ISSUED FOR CONSTRUCTION	04/09/2025

CONSTRUCTION PLAN

PLANS AND DOCUMENTS referred to in the SDA APPROVAL

Queensland Government

SDA approval: AP2025/006

DC CABLE TRAY SCHEMATIC

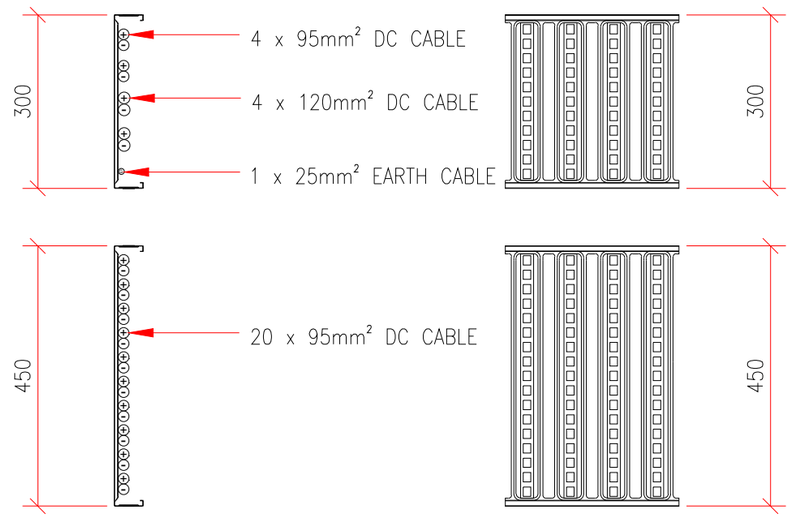

INVERTER TO PVDB CABLE TRAY SCHEMATIC

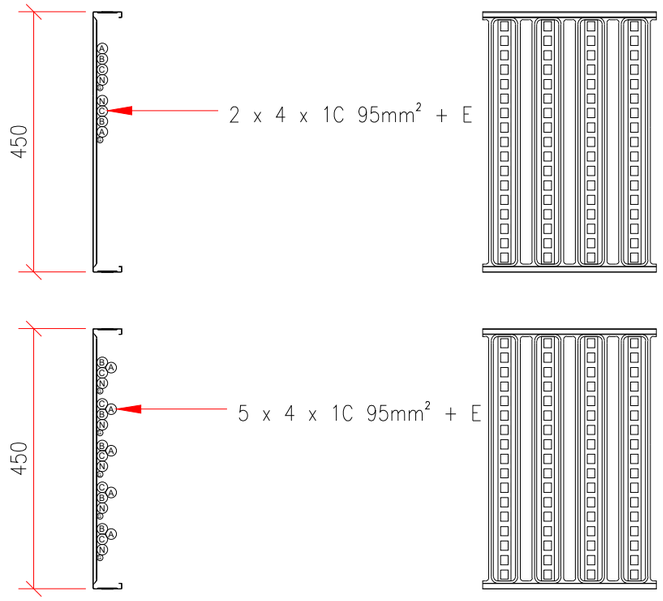

PVDB TO MSB CABLE TRAY SCHEMATIC

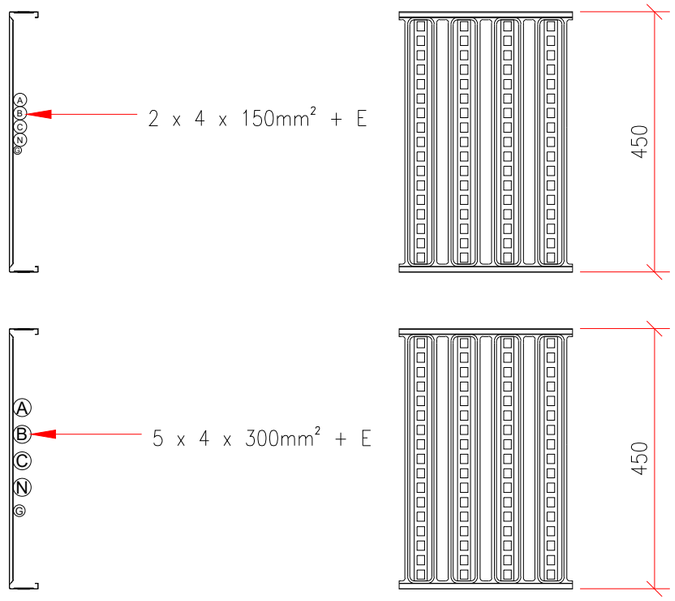

KUGA ENERGY

T: 13 58 42
E: m.merluza@kuga.energy
W: www.13kuga.com.au

This drawing is the intellectual property of Kuga Energy. Copyright © Kuga Energy 2025. All rights reserved.

CLIENT NAME: ETEX AUSTRALIA PTY LTD

PROJECT NUMBER: J3087

SITE ADDRESS: 96 Buss st. Burnett Heads QLD 4670

CABLE TRAY

DWG NO: J3087 - 0018

VER.	DESCRIPTION	DATE
1	ISSUED FOR CONSTRUCTION	04/09/2025

CONSTRUCTION PLAN

PV SYSTEM DETAILS	
PV TYPE/MODEL:	Trina Solar, TSM-NEG21C.20 715 (715W)
No. MODULES:	1260
DC kWp (TOTAL):	900.90 kWp
AC kW (TOTAL):	700kW
INVERTER/MODEL:	7 X Tauro Eco 100-3-P (Fronius)
INSTALLATION TYPE:	FIXED TILT

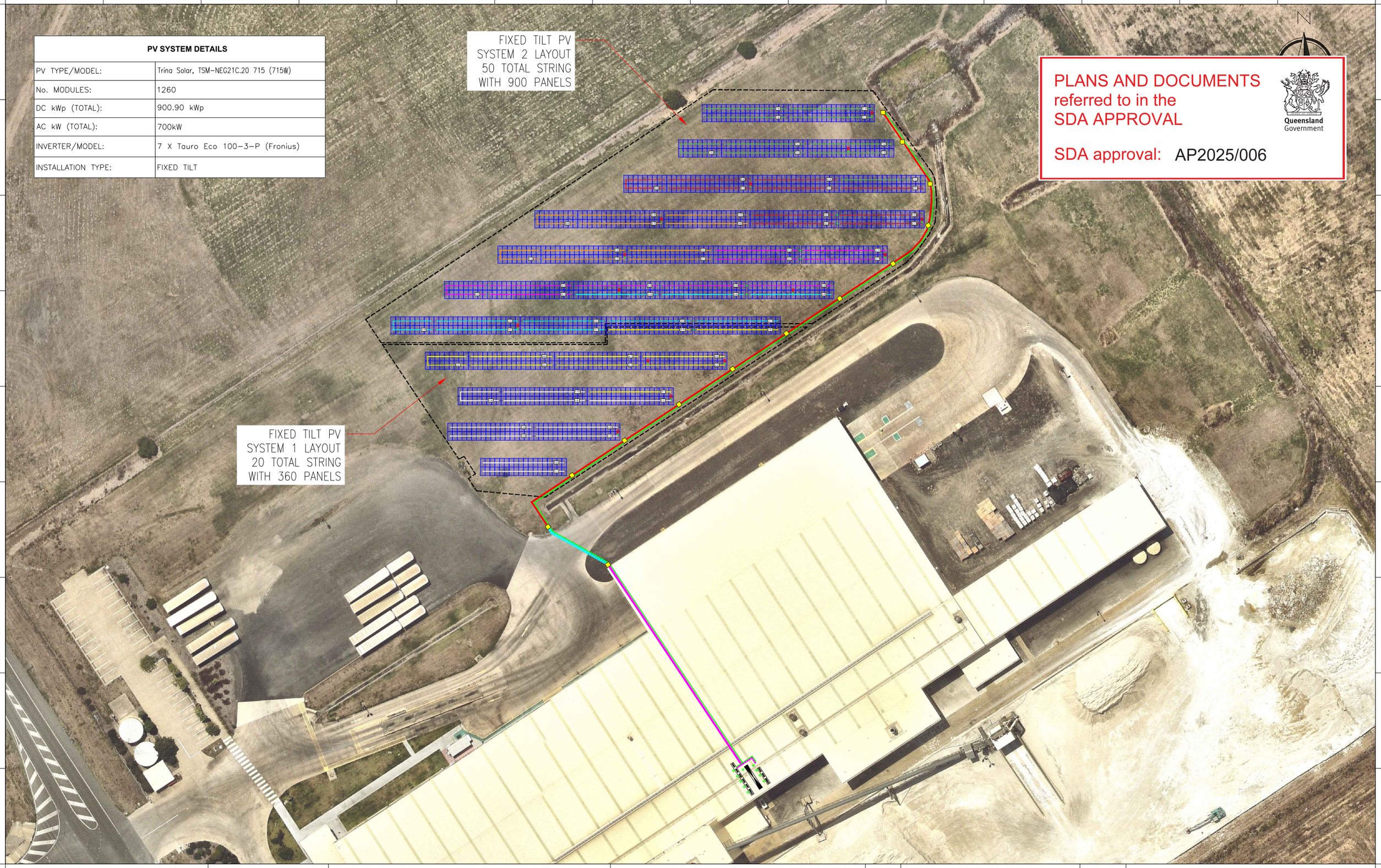

PLANS AND DOCUMENTS referred to in the SDA APPROVAL

Queensland Government

SDA approval: AP2025/006

KUGA ENERGY

T: 13 58 42
E: m.merluza@kuga.energy
W: www.13kuga.com.au

This drawing is the intellectual property of Kuga Energy. Copyright © Kuga Energy 2025. All rights reserved.

CLIENT NAME: ETEX AUSTRALIA PTY LTD

PROJECT NUMBER: J3087

SITE ADDRESS: 96 Buss st. Burnett Heads QLD 4670

EARTHING LAYOUT

DWG NO: J3087 - 0020

VER.	DESCRIPTION	DATE
1	ISSUED FOR CONSTRUCTION	04/09/2025

CONSTRUCTION PLAN